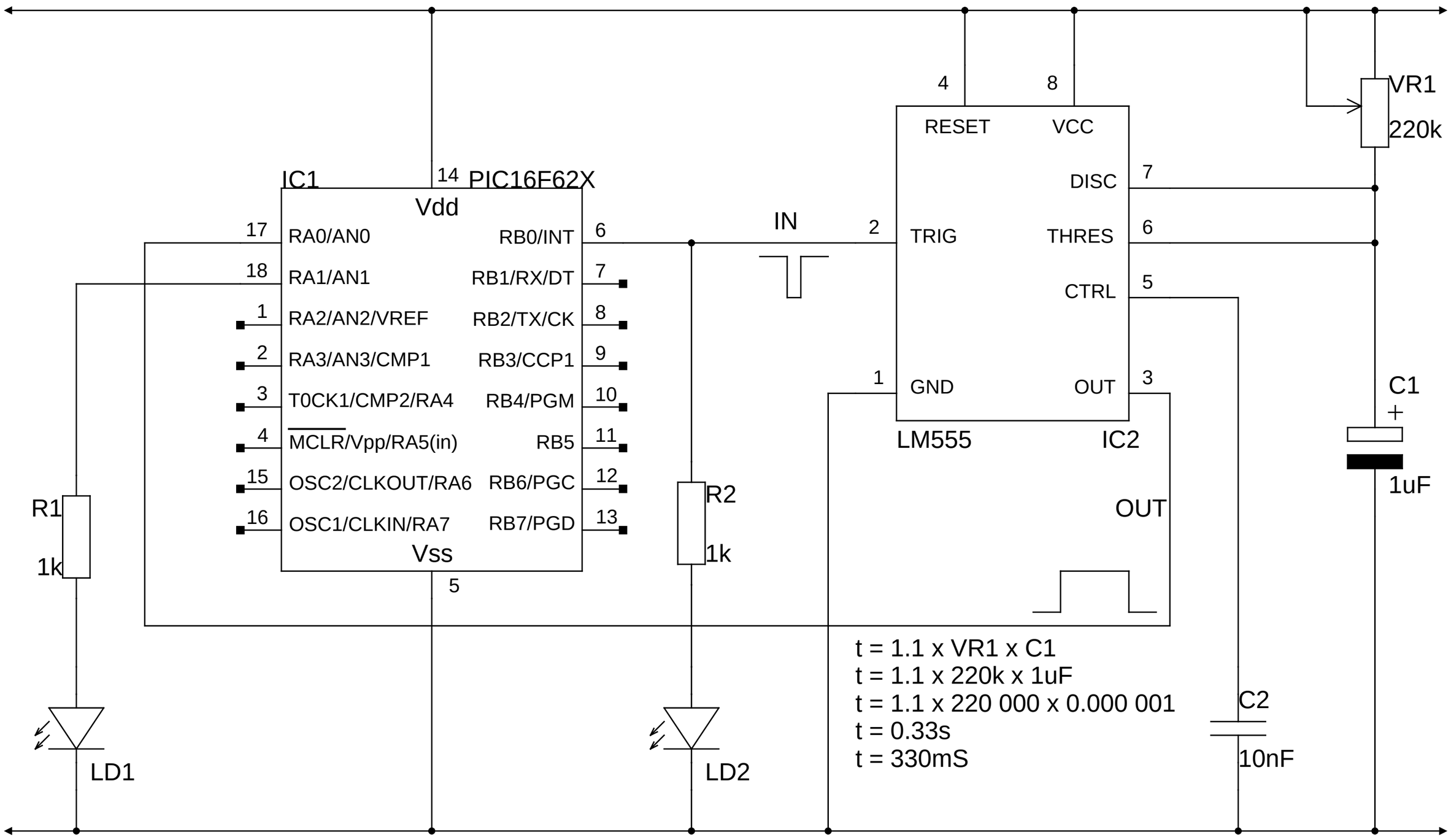
IC1
PIC16F62X
14
Vdd
17
RA0/AN0
18
RA1/AN1
1
RA2/AN2/VREF
2
RA3/AN3/CMP1
3
T0CK1/CMP2/RA4
4
MCLR/Vpp/RA5(in)
15
OSC2/CLKOUT/RA6
16
OSC1/CLKIN/RA7
Vss
5
RB0/INT
6
RB1/RX/DT
7
RB2/TX/CK
8
RB3/CCP1
9
RB4/PGM
10
RB5
11
RB6/PGC
12
RB7/PGD
13
IN
2
R1
1k
LD1
R2
1k
LD2
4
8
RESET
VCC
DISC
7
TRIG
THRES
6
CTRL
5
1
GND
OUT
3
LM555
IC2
OUT
VR1
220k
C1
+
1uF
C2
10nF
t = 1.1 x VR1 x C1
t = 1.1 x 220k x 1uF
t = 1.1 x 220 000 x 0.000 001
t = 0.33s
t = 330mS